BULK MATERIAL HANDLING

Container Loaders

Load shipping or sea containers quickly and easily with a Sudenga container loader. Load grain and other free-flowing materials into 20- and 40-foot shipping containers with a system built around your operation. Choose belt or auger conveying, portable or stationary construction, and inlet options that work with your existing equipment.



FEATURES

- Belt or auger conveying
- Portable or stationary
- Configurations for 20- or 40-foot containers
- Electric or hydraulic drive options
- Multiple inlet and hopper arrangements
- Application-specific dust collection
- Controls ranging from simple operation to advanced electrical packages
- Knocked-down shipment for final assembly at the installation site



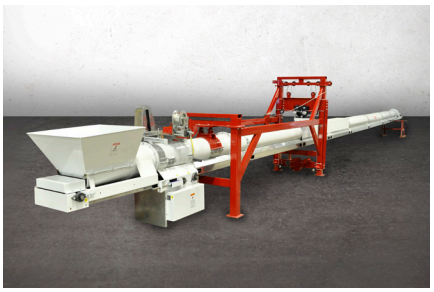

PORTABLE OR STATIONARY

- **Move where you need it.** Choose a portable loader for multiple loading areas or locations where equipment needs to move out of the way.
- **Make loading a permanent part of your system.** Choose a stationary loader for a dedicated location supplied by existing equipment.

BELT OR AUGER

- **Belt conveying:** Gentler handling for materials susceptible to damage or degradation.
- **Auger conveying:** A simple, economical option for durable, free-flowing materials.

LEARN MORE

Sudenga INDUSTRIES, INC.
2002 Kingbird Ave., PO Box 8, George, IA 51237
712-475-3301 | sales@sudenga.com | sudenga.com

Container Loaders



FLEXIBLE FEEDING OPTIONS

Receive material from loader buckets, ground-level hoppers, feeder conveyors, or overhead bins. Match the inlet to your equipment and loading process.

CAPACITY OPTIONS

Conveyor	Operating speed	Maximum estimates capacity
12-inch belt	400 FPM	4,800 CFH / 3,860 BPH
	675 FPM	8,100 CFH / 6,510 BPH
	900 FPM	10,800 CFH / 8,680 BPH
12-inch auger	180 RPM	4,242 CFH / 3,410 BPH

Capacities are maximum estimates. Actual throughput varies with material, speed, conditions, and configuration. BPH figures are approximate and based on U.S. dry bushels.

ESTIMATE LOADING TIME

Estimate loading times with our online calculator. Adjust conveyor capacity, material density, and payload weight for your application.

SCAN TO USE CALCULATOR

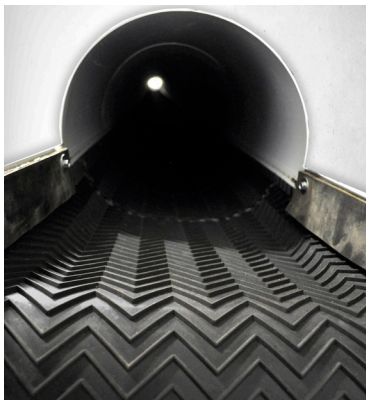

LET'S PLAN YOUR LOADING SYSTEM

Tell us what you're handling, how material reaches the loader, and your target capacity. We'll help evaluate a configuration for your operation.

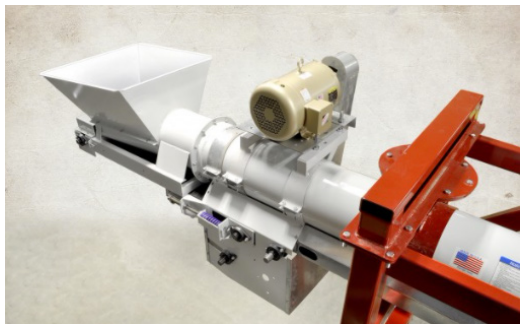



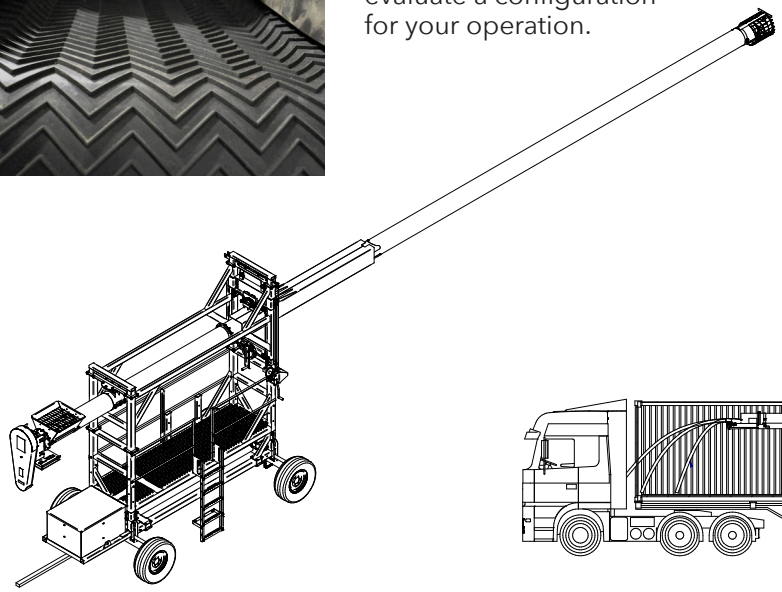

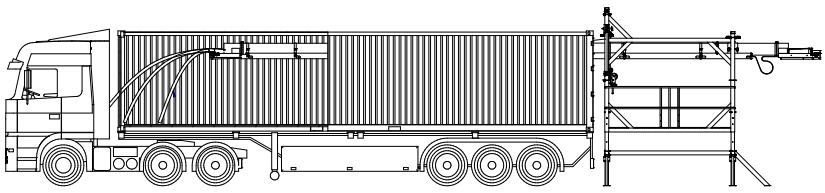

Sudenga INDUSTRIES, INC.
2002 Kingbird Ave., PO Box 8, George, IA 51237
712-475-3301 | sales@sudenga.com | sudenga.com